Longhouse Climber

Product: 1000352, 1000352S



A fun themed climber with varying degrees of climbing difficulties. Constructed of durable Glass Fiber Reinforced Concrete (GFRC). The unique design allows for 360 degrees of climbing, integrated handholds, realistic texture.



Surface mount	In-ground
1000352	1000352S
L: 7’ 9”	L: 7’ 9”
W: 7’ 6”	W: 7’ 6”
H: 4’ 0”	H: 4’ 0”
2,6000 LBS	2,600 LBS

All images and concepts are Copyright © 2026, Cre8Play, LLC-All rights reserved. Cre8Play may change or modify this information as necessary and without notice.

~ All dimensions are approximate ~
~ Heights shown from top of surfacing ~
User Group Age: 2-12
Last Revised 11/24/2026

2401 Edgewood Ave S • Suite 200
St. Louis Park, MN 55426
612.670.8195
info@cre8play.com
cre8play.com

Longhouse Climber

Product: 1000352, 1000352S

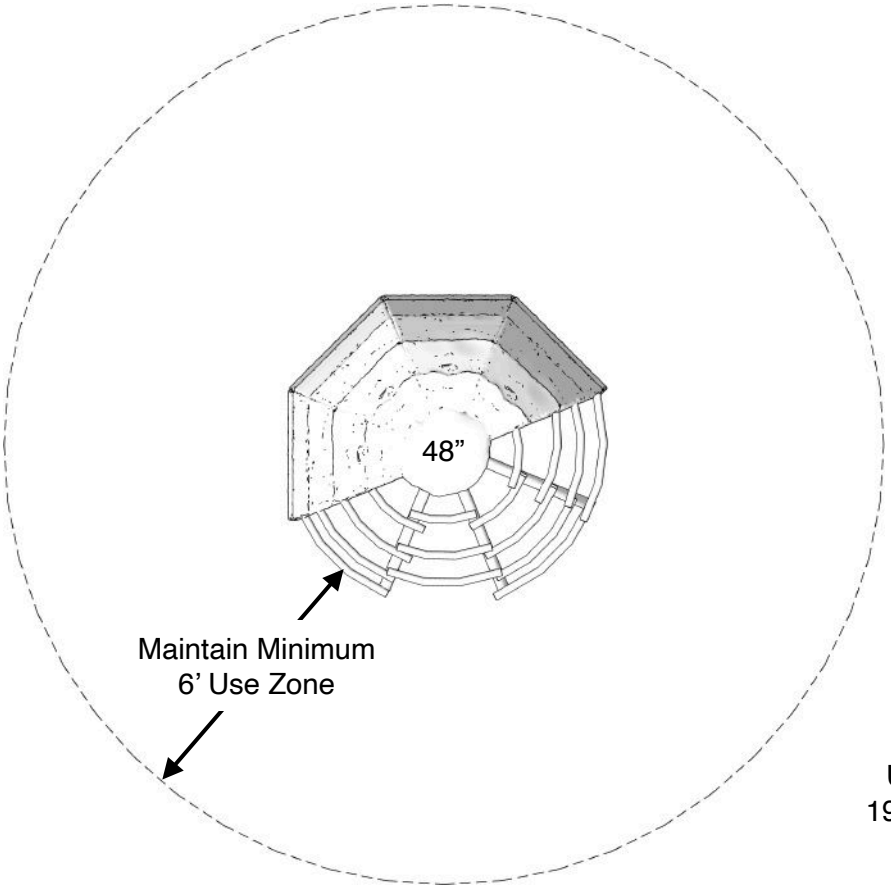

Use Zone:
19’ 9” x 19’ 9”

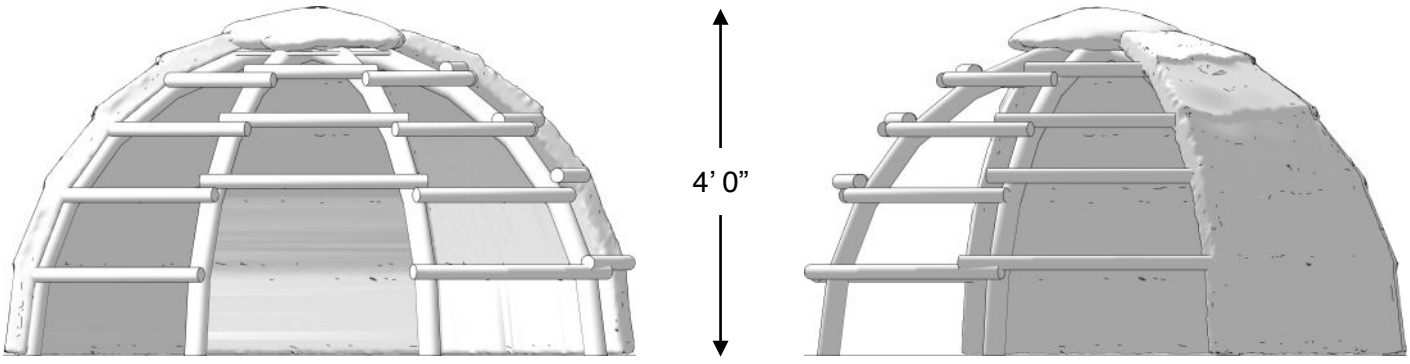

All images and concepts are Copyright © 2026, Cre8Play, LLC-All rights reserved. Cre8Play may change or modify this information as necessary and without notice.

~ All dimensions are approximate ~
~ Heights shown from top of surfacing ~
User Group Age: 2-12
Last Revised 11/24/2026

2401 Edgewood Ave S • Suite 200
St. Louis Park, MN 55426
612.670.8195
info@cre8play.com
cre8play.com

1000352 - Longhouse Climber (In-ground)

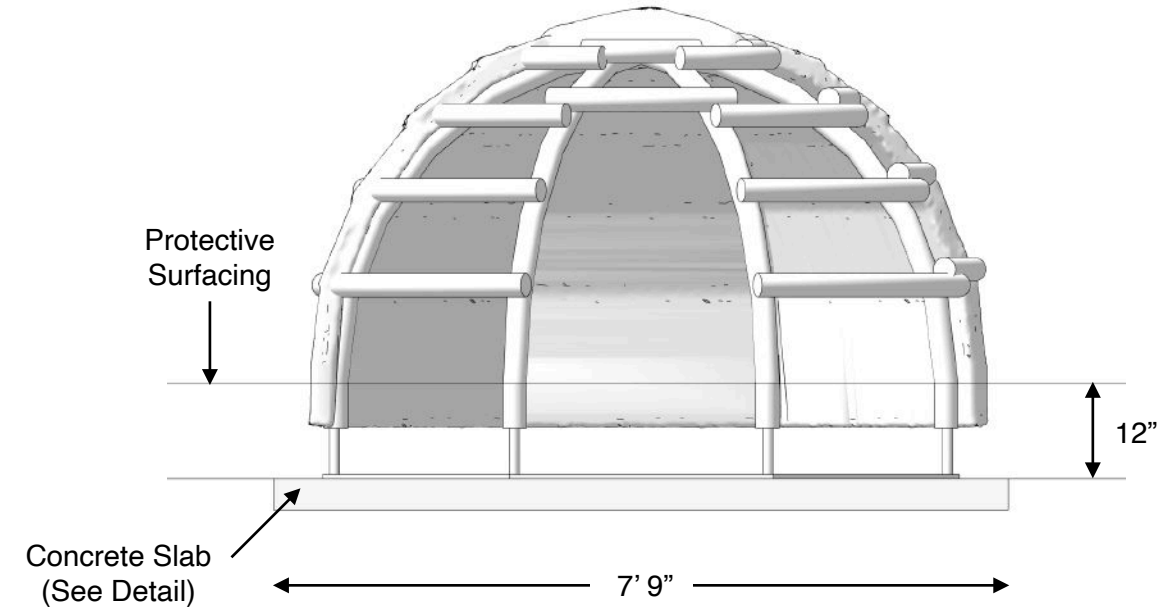

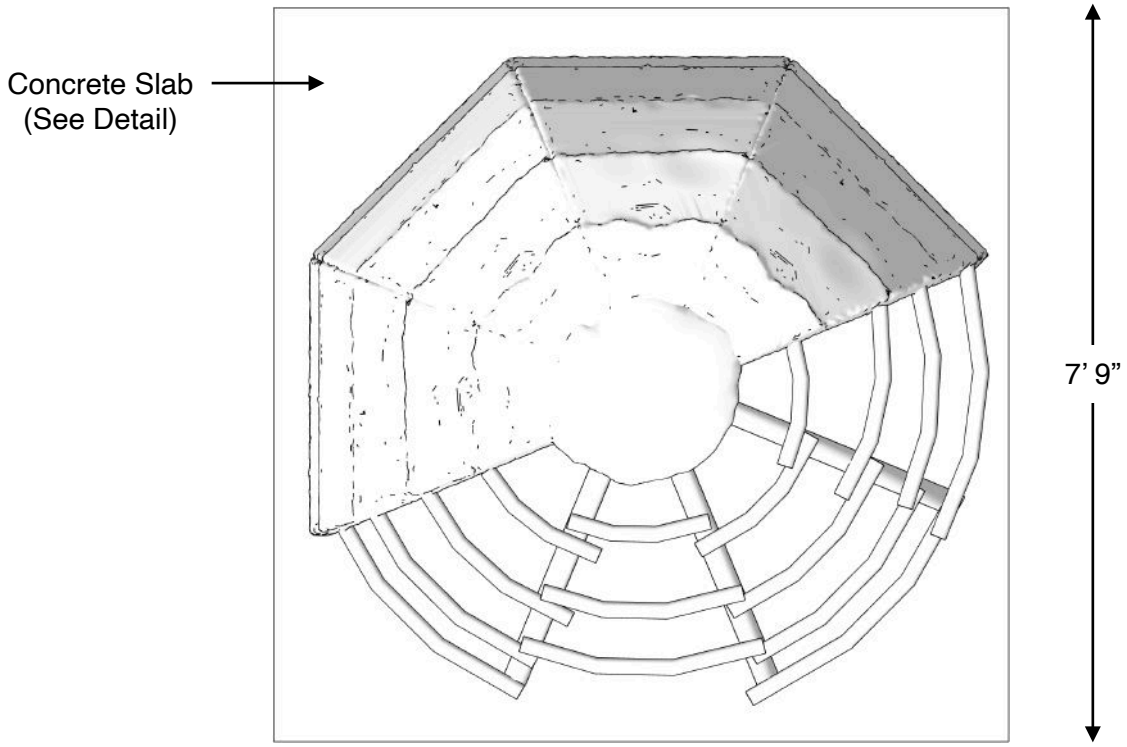

If you determine that less than 12” of surfacing is required, make sure the top of the concrete slab is 12” below the top of the protective surfacing.

All images and concepts are Copyright © 2026, Cre8Play, LLC-All rights reserved. Cre8Play may change or modify this information as necessary and without notice.

~ All dimensions are approximate ~
~ Heights shown from top of surfacing ~
User Group Age: 2-12
Last Revised 11/24/2026

2401 Edgewood Ave S • Suite 200
St. Louis Park, MN 55426
612.670.8195
info@cre8play.com
cre8play.com

1000352S - Longhouse Climber (Surface Mount)

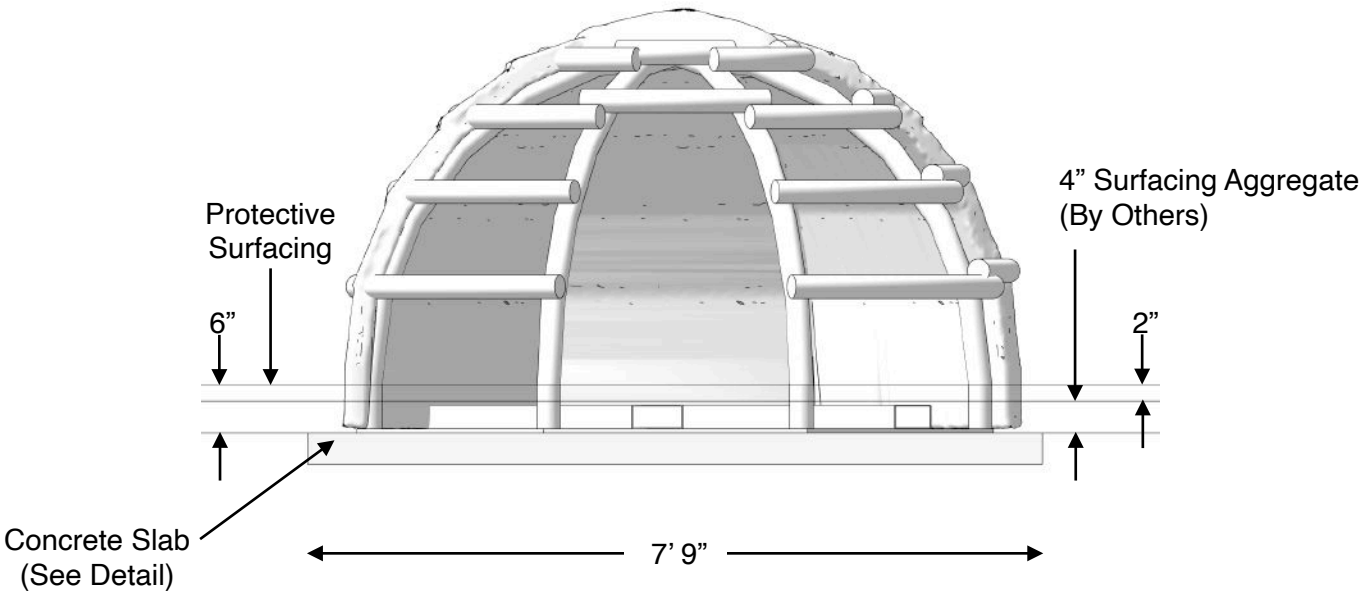

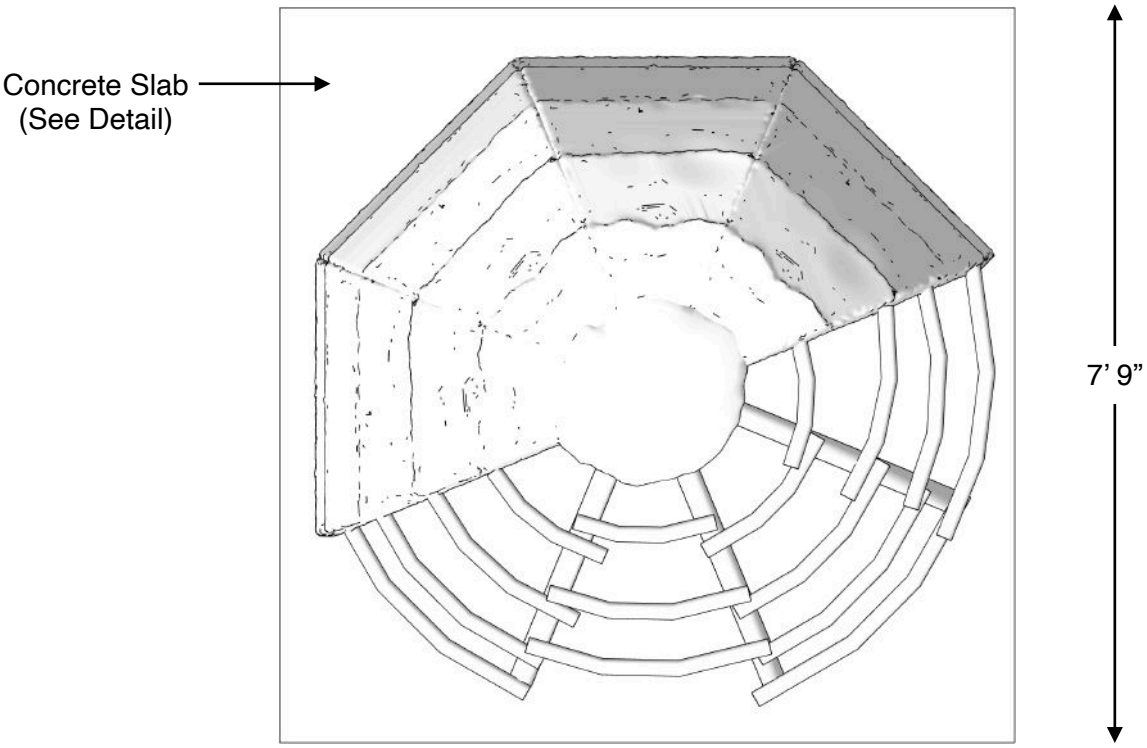

If you determine that less than 6” of surfacing is required, make sure the top of the concrete slab is 6” below the top of the protective surfacing.

All images and concepts are Copyright © 2026, Cre8Play, LLC-All rights reserved. Cre8Play may change or modify this information as necessary and without notice.

~ All dimensions are approximate ~
~ Heights shown from top of surfacing ~
User Group Age: 2-12
Last Revised 11/24/2026

2401 Edgewood Ave S • Suite 200
St. Louis Park, MN 55426
612.670.8195
info@cre8play.com
cre8play.com

Part Number (Surface Mount)

NOTES PRIOR TO CONSTRUCTION:

-Use appropriate equipment to lift and move the play equipment.
-Check local codes and requirements prior to digging or installing any equipment.

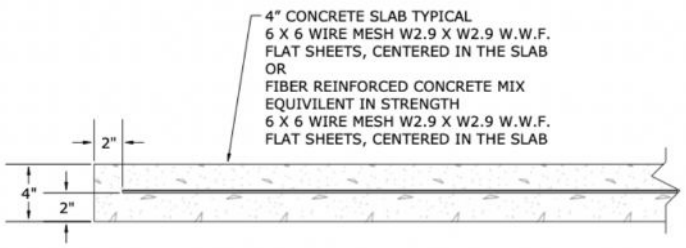

TYPICAL 4" CONCRETE SLAB DETAIL (NOT TO SCALE)
CHECK LOCAL SOIL CONDITIONS.



All images and concepts are Copyright © 2026, Cre8Play, LLC-All rights reserved. Cre8Play may change or modify this information as necessary and without notice.

~ All dimensions are approximate ~
~ Heights shown from top of surfacing ~
User Group Age: 2-12
Last Revised 11/24/2026

2401 Edgewood Ave S • Suite 200
St. Louis Park, MN 55426
612.670.8195
info@cre8play.com
cre8play.com

1000352 - Longhouse Climber (In-ground)

NOTE: Read installation instructions thoroughly before starting installation process.

Step 1: Lay out the area and prepare the site for install. Concrete must be installed over a solid, level base. Check local soil condition and codes. See product installation instructions for minimum use zone requirements to ensure proper spacing and adequate surfacing area.

Step 2: Pour a concrete base for the component. Refer to the typical concrete slab section in this document. The concrete should be flush with the ground level. Allow time for the concrete to completely cure before continuing.

Step 3: Attach lifting eyes to the Longhouse Climber using hardware kit #HK195 (2 places). Using an appropriate forklift or boom, place component into final installation location. See the hardware recommendation for information on anchoring equipment down to your concrete slab. Refer to the surfacing manufacturer for installation of an approved impact attenuating play surface around the component with a minimum use zone in every direction.

Step 4: Remove the lifting eyes and replace with set screws using hardware kit #HK195 (2 places).

Step 5: Locate your anchor bolts, supplied. Using the proper standard drill bit size noted in the installation table, drill the concrete to the appropriate hole depth through the mounting holes.

Step 6: Insert the anchor bolt into the hole and tighten until the bolt is fully seated. Do NOT over tighten the anchor bolts.

Included Items:

Part #	Item	Description	Quantity
1000352	Longhouse Climber	Play Equipment	1
HK195	3014T55	1"-8 x 2-1/4" Lifting Eye Bolt	2
HK195	92311A951	1"-8 x 1/2" Set Screws, SS	2
HK128	HDW-16	Anchor Bolt 1/2" x 3"	4

Anchor Bolt Installation:

Anchor Bolt Size	ANSI Standard Drill Bit Diameter	Anchor Head (Socket Size)	Minimum Embedment	Hole Depth
1/2" x 3"	7/16"	3/4"	2 1/2"	3 1/2"
5/8" x 4"	1/2"	13/16"	3 1/2"	4 1/2"
5/8" x 6"	1/2"	13/16"	5 1/2"	6 1/2"

Step 1: Drill

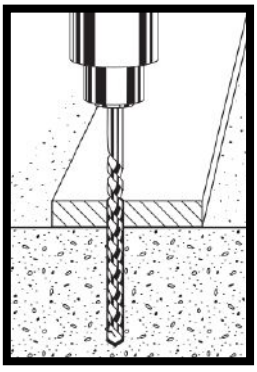

Step 2: Anchor

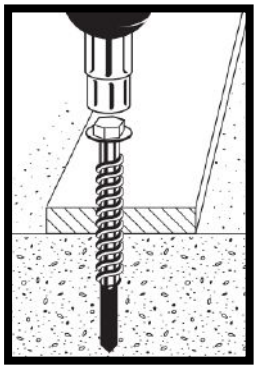

NOTE: Always wear eye protection appropriate to the task at hand.

All images and concepts are Copyright © 2026, Cre8Play, LLC-All rights reserved. Cre8Play may change or modify this information as necessary and without notice.

~ All dimensions are approximate ~
~ Heights shown from top of surfacing ~
User Group Age: 2-12
Last Revised 11/24/2026

2401 Edgewood Ave S • Suite 200
St. Louis Park, MN 55426
612.670.8195
info@cre8play.com
cre8play.com

1000352S - Longhouse Climber (Surface Mount)

NOTE: Read installation instructions thoroughly before starting installation process.

Step 1: Lay out the area and prepare the site for install. Concrete must be installed over a solid, level base. Check local soil condition and codes. See product installation instructions for minimum use zone requirements to ensure proper spacing and adequate surfacing area.

Step 2: Pour a concrete base for the component. Refer to the typical concrete slab section in this document. The concrete should be flush with the ground level. Allow time for the concrete to completely cure before continuing.

Step 3: Using an appropriate forklift or boom, place component into final installation location. See the hardware recommendation for information on anchoring equipment down to your concrete slab. Refer to the surfacing manufacturer for installation of an approved impact attenuating play surface around the component with a minimum use zone in every direction.

Step 4: Locate your anchor bolts, supplied. Using the proper standard drill bit size noted in the installation table, drill the concrete to the appropriate hole depth through the mounting holes.

Step 5: Insert the anchor bolt into the hole and tighten until the bolt is fully seated. Do NOT over tighten the anchor bolts.

Included Items:

Part #	Item	Description	Quantity
1000352S	Longhouse Climber	Play Equipment	1
HK128	HDW-16	Anchor Bolt 1/2” x 3”	4

Anchor Bolt Installation:

Anchor Bolt Size	ANSI Standard Drill Bit Diameter	Anchor Head (Socket Size)	Minimum Embedment	Hole Depth
1/2” x 3”	7/16”	3/4”	2 1/2”	3 1/2”
5/8” x 4”	1/2”	13/16”	3 1/2”	4 1/2”
5/8” x 6”	1/2”	13/16”	5 1/2”	6 1/2”

Step 1: Drill

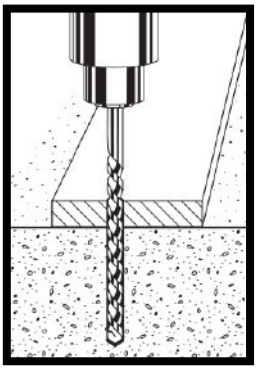

Step 2: Anchor

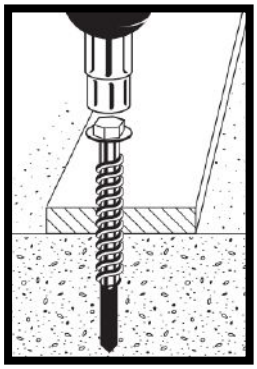

NOTE: Always wear eye protection appropriate to the task at hand.

All images and concepts are Copyright © 2026, Cre8Play, LLC-All rights reserved. Cre8Play may change or modify this information as necessary and without notice.

~ All dimensions are approximate ~
~ Heights shown from top of surfacing ~
User Group Age: 2-12
Last Revised 11/24/2026

2401 Edgewood Ave S • Suite 200
St. Louis Park, MN 55426
612.670.8195
info@cre8play.com
cre8play.com