Giant Baseball Bat

Product: 1000257

Constructed of durable Glass Fiber Reinforced Concrete (GFRC). The unique design allows for various degrees of climbing and realistic texture. The Giant Baseball Bat ships as two pieces.

Assembled Size
L: 13’ 9”
W: 2’ 10”
H: 2’ 4”
1,500 LBS

Grip/Handle Size
L: 5’ 10”
W: 2’ 1”
H: 1’ 8”
635 LBS

Barrel Size
L: 7’ 11”
W: 2’ 10”
H: 2’ 4”
865 LBS

All images and concepts are Copyright © 2024, Cre8Play, LLC-All rights reserved. Cre8Play may change or modify this information as necessary and without notice.

~ All dimensions are approximate ~
~ Heights shown from top of surfacing ~
User Group Age: 5-12
Last Revised 1/20/2025

2401 Edgewood Ave S • Suite 200
St. Louis Park, MN 55426
612.670.8195
info@cre8play.com
cre8play.com

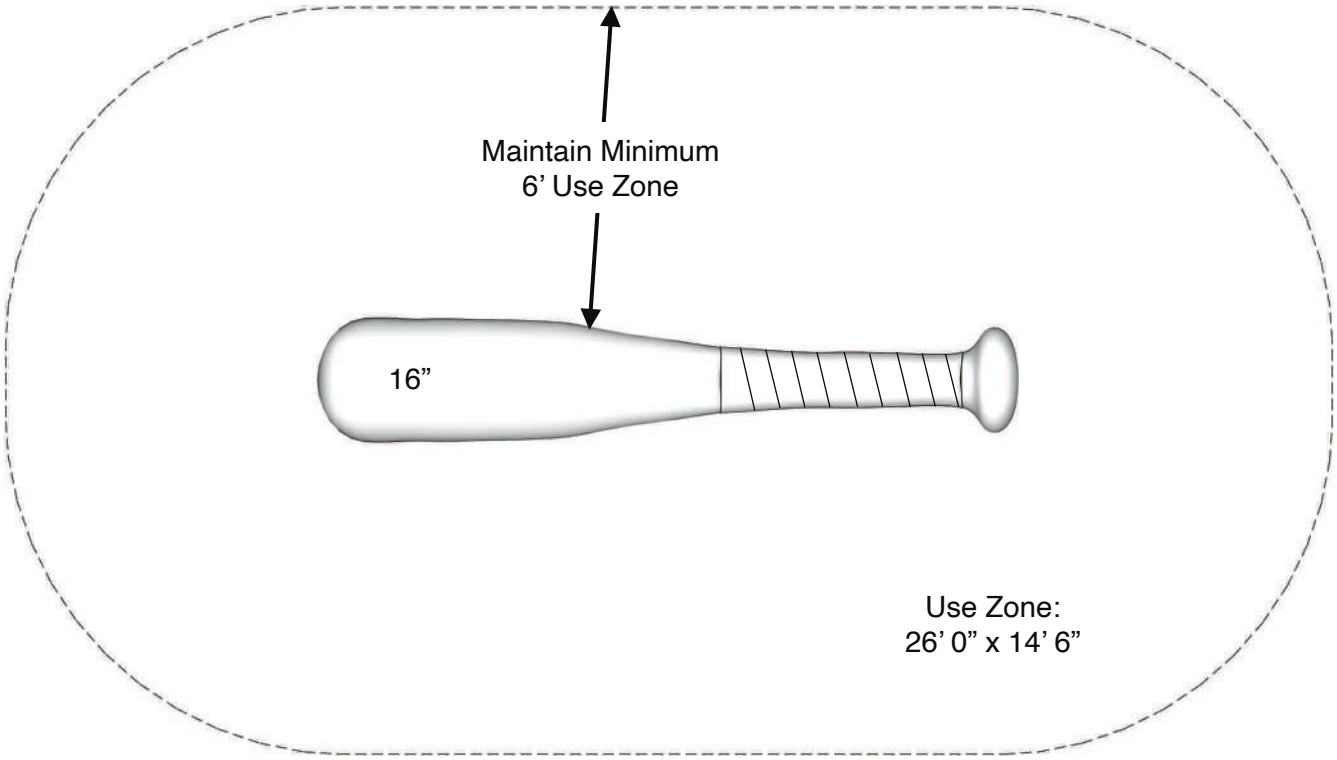

All images and concepts are Copyright © 2024, Cre8Play, LLC-All rights reserved. Cre8Play may change or modify this information as necessary and without notice.

~ All dimensions are approximate ~
~ Heights shown from top of surfacing ~
User Group Age: 5-12
Last Revised 1/20/2025

2401 Edgewood Ave S • Suite 200
St. Louis Park, MN 55426
612.670.8195
info@cre8play.com
cre8play.com

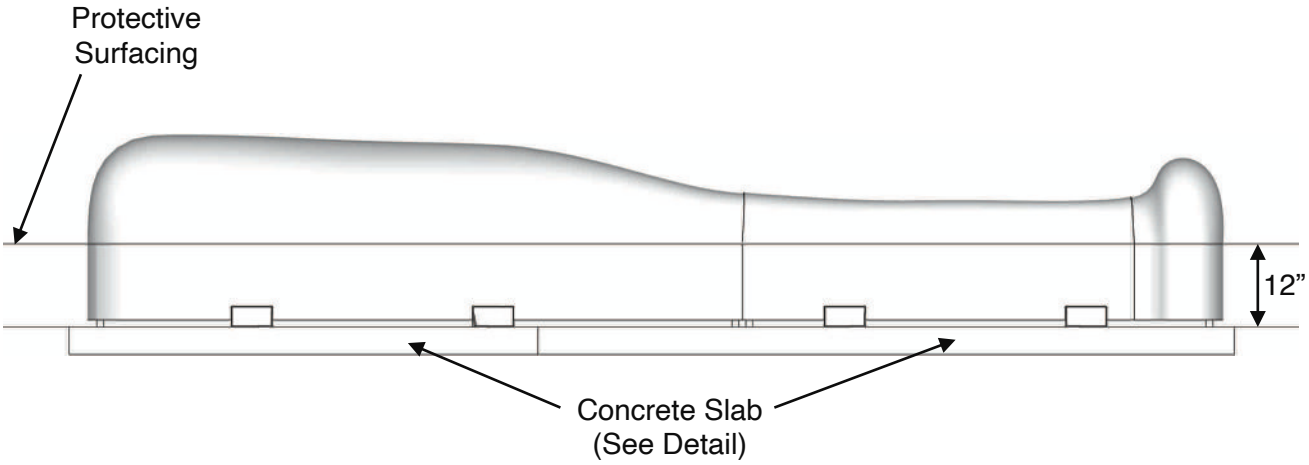

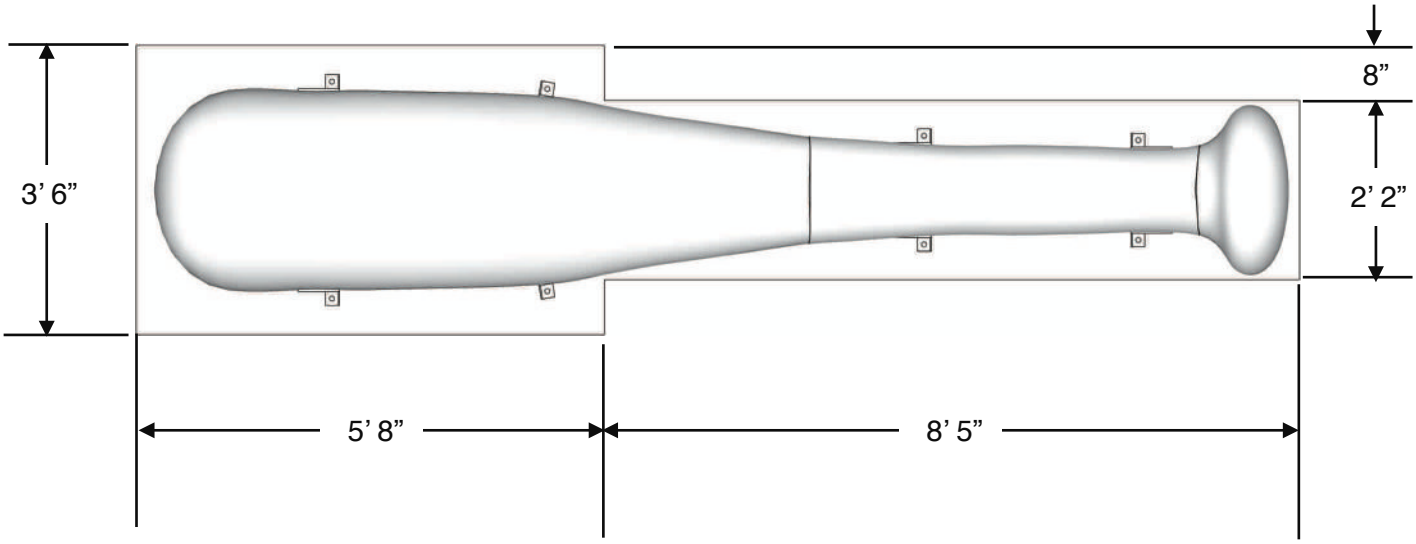

If you determine that less than 12” of surfacing is required, make sure the top of the concrete slab is 12” below the top of the protective surfacing.

All images and concepts are Copyright © 2024, Cre8Play, LLC-All rights reserved. Cre8Play may change or modify this information as necessary and without notice.

~ All dimensions are approximate ~
~ Heights shown from top of surfacing ~
User Group Age: 5-12
Last Revised 1/20/2025

2401 Edgewood Ave S • Suite 200
St. Louis Park, MN 55426
612.670.8195
info@cre8play.com
cre8play.com

NOTES PRIOR TO CONSTRUCTION:

-Use appropriate equipment to lift and move the play equipment.
-Check local codes and requirements prior to digging or installing any equipment.

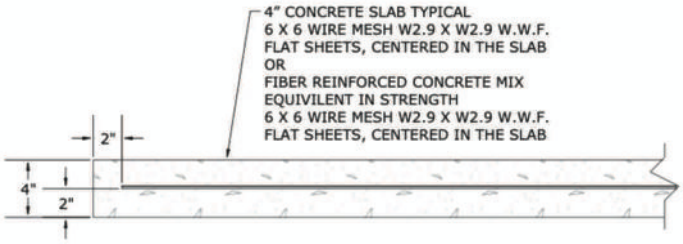

TYPICAL 4" CONCRETE SLAB DETAIL (NOT TO SCALE)
CHECK LOCAL SOIL CONDITIONS.

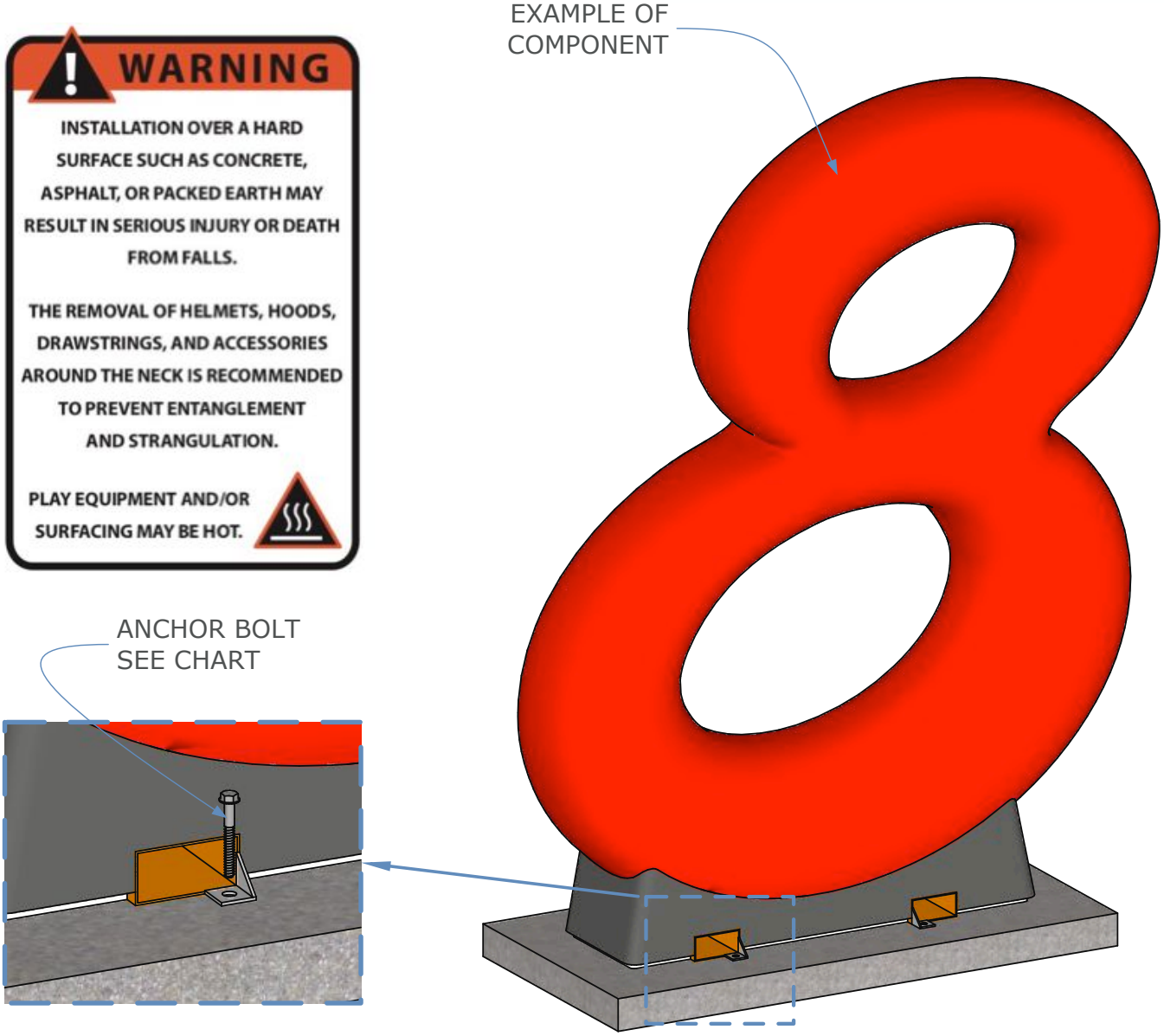

All images and concepts are Copyright © 2024, Cre8Play, LLC-All rights reserved. Cre8Play may change or modify this information as necessary and without notice.

~ All dimensions are approximate ~
~ Heights shown from top of surfacing ~
User Group Age: 5-12
Last Revised 1/20/2025

2401 Edgewood Ave S • Suite 200
St. Louis Park, MN 55426
612.670.8195
info@cre8play.com
cre8play.com

Assembly Instructions

Step 1: Lay out the area and prepare the site for install. Concrete must be installed over a solid, level base. Check local soil condition and codes. See product specification sheet for minimum use zone requirements to ensure proper spacing and adequate surfacing area.

Step 2: Pour concrete slab for the Giant Baseball Bat. Refer to the typical slab section in these installation instructions. The concrete should be flush with the sub-grade surface. Allow time for the concrete to completely cure before continuing.

Step 3: Using an appropriate lull-type forklift or boom, place play equipment into final installation location. See the hardware recommendation page for information on anchoring equipment down to your slab. Position the bat halves so the seam is tight. Shim as needed. Using hardware kit HK-128, anchor the bat halves to the concrete. Using hardware kit HK-150, caulk the seam between the bat halves. Refer to the surfacing manufacturer for installation of an approved impact attenuating play surface around the Giant Baseball Bat with a minimum of 6 feet in every direction.

Included Items:

Part #	Item	Description	Quantity
1000257	Bat Barrel	Play Equipment	1
1000257	Bat Grip	Play Equipment	1
HK0150	Hardware	Dynaflex Ultra Black Caulking, 10.1 oz.	1
HK128	Hardware	1/2” x 3” Tapcon Concrete Anchors	8

All images and concepts are Copyright © 2024, Cre8Play, LLC-All rights reserved. Cre8Play may change or modify this information as necessary and without notice.

2401 Edgewood Ave S • Suite 200
St. Louis Park, MN 55426
612.670.8195
info@cre8play.com
cre8play.com