Tree and Stone Slice

Products: 1000220, 1000205



Uniquely themed Tree and Stone Slices as a balance and stepping feature. Constructed from Glass Fiber Reinforced Concrete (GFRC), these have the appearance of real tree stumps and boulders with a kid friendly flattened top.



Tree Slice
1000220
L: 1'-6" x W: 1'-6" x H: 0'-4"
18 LBS each



Stone Slice
1000205
L: 1'-6" x W: 1'-6" x H: 0'-4"
18 LBS each

All images and concepts are Copyright © 2026, Cre8Play, LLC-All rights reserved. Cre8Play may change or modify this information as necessary and without notice.

~ Dimensions and weights are approximate ~
~ Heights shown from top of surfacing ~
User Group Age: 2-12

Revised 3/18/2026

2401 Edgewood Ave S • Suite 200
St. Louis Park, MN 55426
612.670.8195
info@cre8play.com
cre8play.com

Tree and Stone Slice

Products: 1000220, 1000205

Installation Instructions

Use Zone

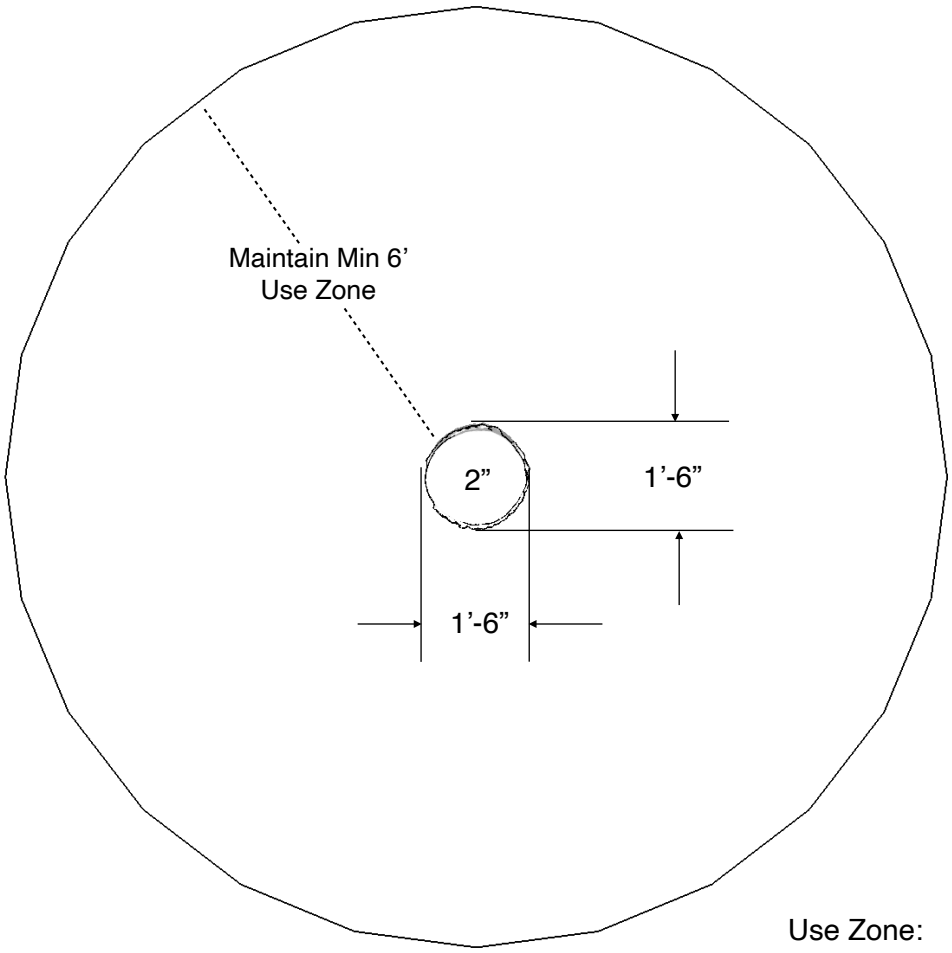

Use Zone:
13' 6" x 13' 6"

Product: 1000220

Included Items:

Part #	Item	Description	Quantity
Varies	Tree or Stone Slice	Play Equipment	1
NPN	Threaded Insert	Mounting Hardware	2

All images and concepts are Copyright © 2026, Cre8Play, LLC-All rights reserved. Cre8Play may change or modify this information as necessary and without notice.

~ All dimensions are approximate ~

User Group Age: 2-12

Revised 3/18/2026

2401 Edgewood Ave S • Suite 200
St. Louis Park, MN 55426
612.670.8195
info@cre8play.com
cre8play.com

Installation Instructions

Optional - Place on top of Surfacing



1000220

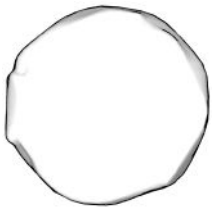

1000205

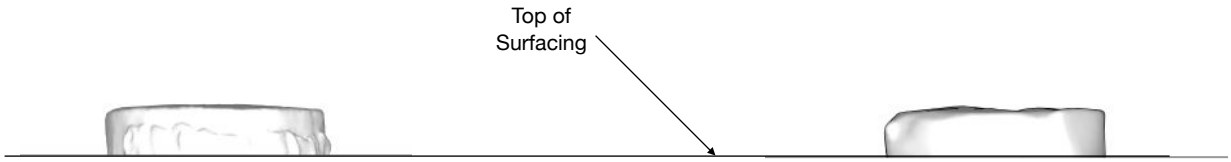

1000220

1000205

Product: 1000220 & 1000205

All images and concepts are Copyright © 2026, Cre8Play, LLC-All rights reserved. Cre8Play may change or modify this information as necessary and without notice.

~ All dimensions are approximate ~

User Group Age: 2-12

Revised 3/18/2026

2401 Edgewood Ave S • Suite 200
St. Louis Park, MN 55426
612.670.8195
info@cre8play.com
cre8play.com

Installation Instructions

Optional - Surface Mount

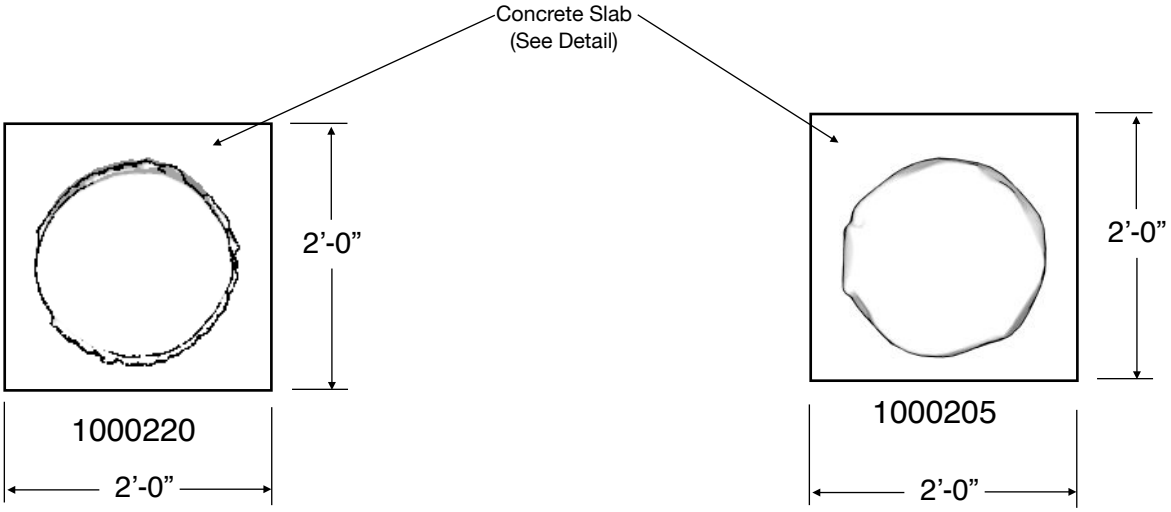

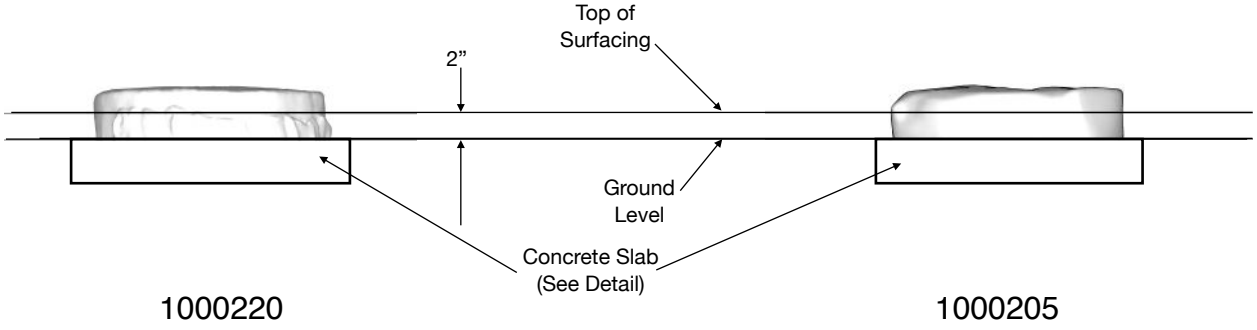

Product: 1000220 & 1000205

All images and concepts are Copyright © 2026, Cre8Play, LLC-All rights reserved. Cre8Play may change or modify this information as necessary and without notice.

~ All dimensions are approximate ~

User Group Age: 2-12

Revised 3/18/2026

2401 Edgewood Ave S • Suite 200
St. Louis Park, MN 55426
612.670.8195
info@cre8play.com
cre8play.com

Installation Instructions

Optional - Surface Mount

NOTE: Read installation instructions thoroughly before starting installation process.

Step 1: Lay out the area and prepare the site for install. Concrete must be installed over a solid, level base. Check local soil condition and codes. See product installation instructions for minimum use zone requirements to ensure proper spacing and adequate surfacing area.

Step 2: Pour a concrete base for the stepper. Refer to the typical slab section on this page. The concrete should be flush with the ground level. Allow time for the concrete to completely cure before continuing.

Step 3: Using the appropriate equipment, place the stepper into final installation location. Use a PLC type construction adhesive to anchor the equipment down to your slab. Refer to the surfacing manufacturer for installation of an approved impact attenuating play surface around the stepper with a minimum of 6 feet in every direction.

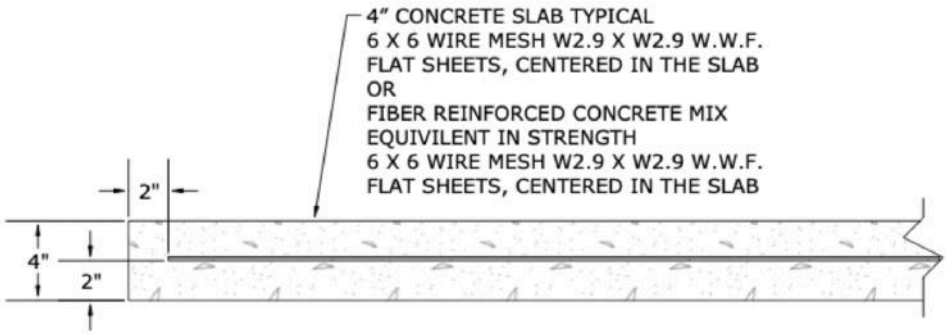

TYPICAL 4" CONCRETE SLAB DETAIL (NOT TO SCALE)
CHECK LOCAL SOIL CONDITIONS.

NOTES PRIOR TO CONSTRUCTION:

- Use appropriate equipment to lift and move the play equipment.
- Check local codes and requirements prior to digging or installing any equipment.



All images and concepts are Copyright © 2026, Cre8Play, LLC-All rights reserved. Cre8Play may change or modify this information as necessary and without notice.

~ All dimensions are approximate ~
User Group Age: 2-12
Revised 3/18/2026

2401 Edgewood Ave S • Suite 200
St. Louis Park, MN 55426
612.670.8195
info@cre8play.com
cre8play.com