Chicken Stepper

Product: 1000325



When is it fun to step on critters? At the park of course. Kids can step and play on these critters all day long. Made of durable long-lasting Glass Fiber Reinforced Concrete (GFRC), our steppers will stand the test of time!



L: 2’ 3”
W: 1’ 5”
H: 1’ 5”
120 LBS

All images and concepts are Copyright © 2025, Cre8Play, LLC-All rights reserved. Cre8Play may change or modify this information as necessary and without notice.

~ All dimensions are approximate ~
~ Heights shown from top of surfacing ~
User Group Age: 2-12
Last Revised 3/10/2025

2401 Edgewood Ave S • Suite 200
St. Louis Park, MN 55426
612.670.8195
info@cre8play.com
cre8play.com

Chicken Stepper

Product: 1000325

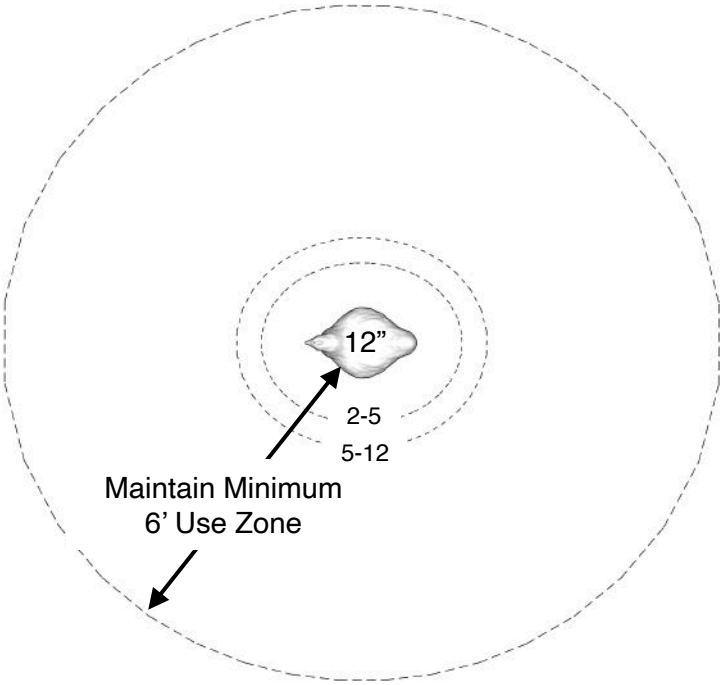

Use Zone:
14’ 5” x 13’ 7”

Stepping forms shall be no greater than 12 in. (300mm) apart when intended for use by 2 through 5-year-olds and no greater than 18 in. (460 mm) apart when intended for use by 5 through 12-year-olds. This dimension shall be measured edge to edge between the adjacent stepping surfaces. (This measurement will be horizontal when adjacent stepping forms are at the same height and it will be diagonal when adjacent stepping forms are at different heights.)

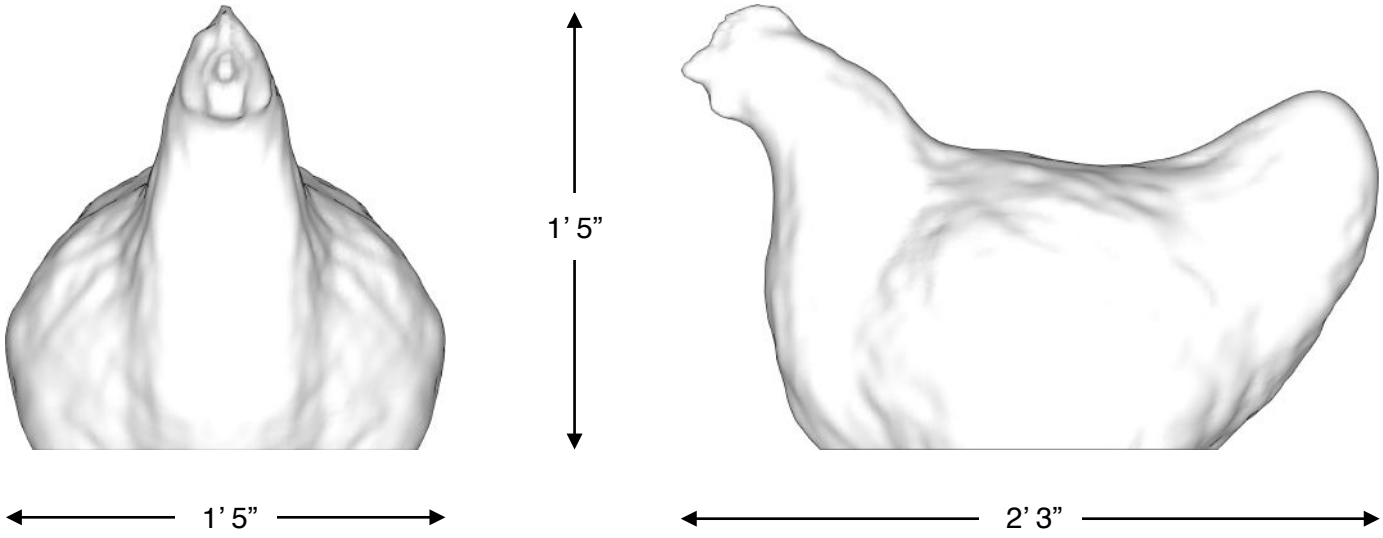

All images and concepts are Copyright © 2025, Cre8Play, LLC-All rights reserved. Cre8Play may change or modify this information as necessary and without notice.

~ All dimensions are approximate ~
~ Heights shown from top of surfacing ~
User Group Age: 2-12
Last Revised 3/10/2025

2401 Edgewood Ave S • Suite 200
St. Louis Park, MN 55426
612.670.8195
info@cre8play.com
cre8play.com

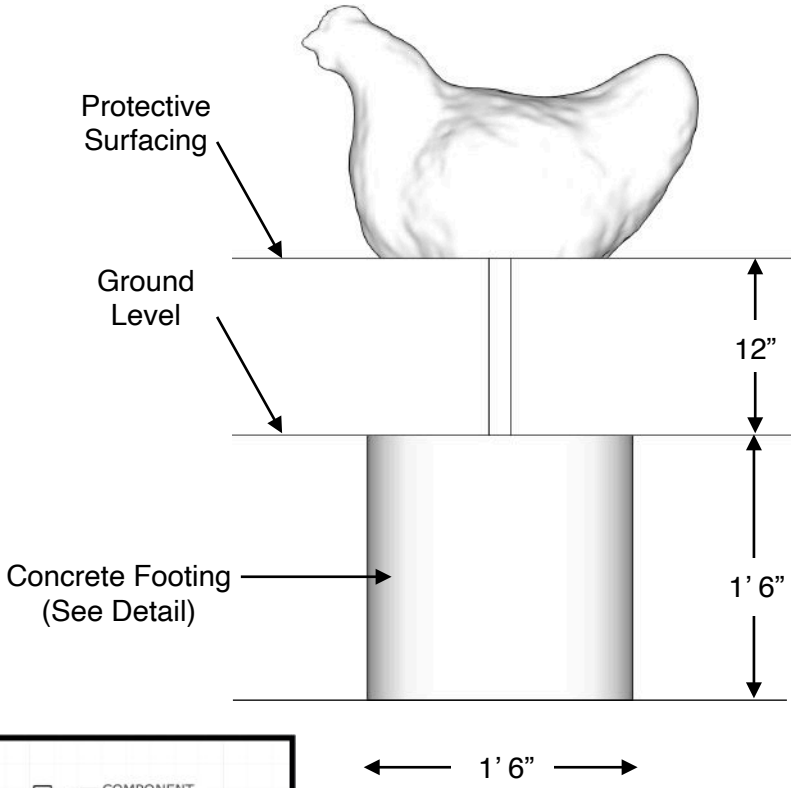

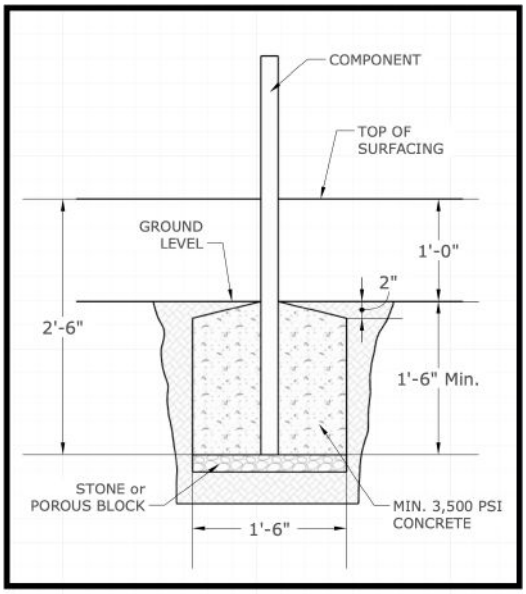

Typical Component Footing Detail
Check local soil conditions.
(Not to Scale)

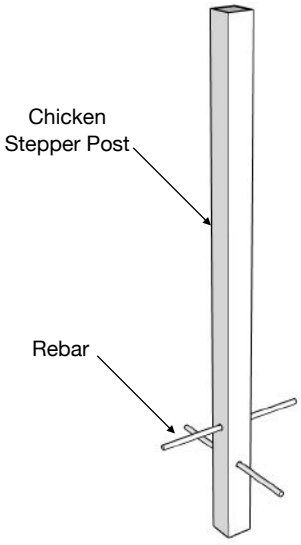

If you determine that less than 12” of surfacing is required, make sure the top of the concrete footing is 12” below the top of the protective surfacing.

All images and concepts are Copyright © 2025, Cre8Play, LLC-All rights reserved. Cre8Play may change or modify this information as necessary and without notice.

~ All dimensions are approximate ~
~ Heights shown from top of surfacing ~
User Group Age: 2-12
Last Revised 3/10/2025

2401 Edgewood Ave S • Suite 200
St. Louis Park, MN 55426
612.670.8195
info@cre8play.com
cre8play.com

NOTE: Read installation instructions thoroughly before starting installation process.

Step 1: Lay out the area and prepare the site for install. Concrete must be installed over a solid, level base. Check local soil condition and codes. See product installation instructions for minimum use zone requirements to ensure proper spacing and adequate surfacing area.

Step 2: Refer to the typical in-ground footing detail on excavating a hole for the the component.

Step 3: Slide the 2 pieces of rebar into the holes on the base of the Chicken Stepper post. Place Chicken Stepper post onto the stone or porous block at the bottom of the excavated hole. Ensure any space between the bottom of the Chicken Stepper and top of grade will be completely covered by your particular type of surfacing. Temporarily brace the post.

Step 4: Pour a concrete footing for the Chicken Stepper. Refer to the typical footing section on the typical in-ground mounted footing page. This concrete should be flush with the ground level. Allow time for the concrete to completely cure before removing temporary bracing. Once the concrete is cured, fill the hole of the Chicken Stepper with Loctite PL 500 landscape block adhesive (or similar) adhesive. Slide the ball onto the post and allow the PLC adhesive to cure.

Step 5: Refer to the surfacing manufacturer for installation of an approved impact attenuating play surface around the Baseball Stepper a minimum of 6 feet in every direction.

Included Items:

Part #	Item	Description	Quantity
1000325	Chicken Stepper	Play Equipment	1
NPN	Chicken Stepper Post	Play Equipment	1
NPN	Rebar	Hardware	2

Items not provided:

Part #	Item	Description	Quantity
HK139	1002922580	Loctite PL 500 landscape block adhesive (or similar)	1

NOTES PRIOR TO CONSTRUCTION:

- Use appropriate equipment to lift and move the play equipment.
- Check local codes and requirements prior to digging or installing any equipment.



NOTE: Always wear eye protection appropriate to the task at hand.

All images and concepts are Copyright © 2025, Cre8Play, LLC-All rights reserved. Cre8Play may change or modify this information as necessary and without notice.

~ All dimensions are approximate ~
~ Heights shown from top of surfacing ~
User Group Age: 2-12
Last Revised 3/10/2025

2401 Edgewood Ave S • Suite 200
St. Louis Park, MN 55426
612.670.8195
info@cre8play.com
cre8play.com